

DOZER BLADE

OPERATORS & PARTS MANUAL

PM-000026-C

1 TABLE OF CONTENTS

1	TABLE OF CONTENTS	2
2	TO THE PURCHASER	3
3	SERVICE & PREPARATION FOR USE	4
4	SAFETY PRECAUTIONS - GENERAL INFORMATION	6
5	SAFETY - WORKING WITH THE ATTACHMENT	12
6	BEFORE USE	14
7	INSTALLATION AND OPERATING INSTRUCTIONS	15
8	MAINTENANCE	18
9	SAFETY - STICKER LOCATION	19
10	SPARE PARTS	20
11	TROUBLESHOOTING	21
12	WARRANTY	22

Congratulations on the purchase of your new DIGGA product! This product was carefully designed and manufactured to give you many years of dependable service. Only minor maintenance is required to keep it in top working condition. Be sure to observe all maintenance procedures and safety precautions in this manual and on any safety decals located on the product and on any equipment on which the attachment is mounted.

This manual has been designed to help you do a better, safer job. Read this manual carefully and become familiar with its contents.

WARNING!



Never let anyone operate this unit without reading the “Safety Precautions” and “Operating Instructions” sections of this manual. Always choose hard, level ground to park the vehicle on and set the brake so the unit cannot roll. Unless noted otherwise, right and left sides are determined from the operator’s control position when facing the attachment.

NOTE: The illustrations and data used in this manual were current (according to the information available to us) at the time of printing, however, we reserve the right to redesign and change the attachment as may be necessary without notification.

BEFORE OPERATION

The primary responsibility for safety with this equipment falls to the operator. Make sure the equipment is operated only by trained individuals that have read and understand this manual. If there is any portion of this manual or function you do not understand, contact your local authorized dealer or the manufacturer to obtain further assistance. Keep this manual available for reference.

Provide the manual to any new owners and/or operators.

SAFETY ALERT SYMBOL



This is the “Safety Alert Symbol” used by this industry. This symbol is used to warn of possible injury. Be sure to read all warnings carefully. They are included for your safety and for the safety of others working with you.

SERVICE

Use only manufacturer replacement parts. Substitute parts may not meet the required standards. Record the model and serial number of your unit on page 6. The parts department needs this information to insure that you receive the correct parts.

3 SERVICE & PREPARATION FOR USE

DIGGA Dozer Blade is designed and manufactured to give dependable service. To keep it running efficiently read the instructions in this operator's manual. Each section is clearly identified so that you can easily find the information you need - whether it is setup, operation or maintenance.

Dozer Blade equipment options are available to help you do a better job in special conditions. These are noted throughout this manual and can be purchased from your DIGGA dealer eg. Adaptor harnesses.

To facilitate warranty or service, record the model and serial number of your unit in the space provided on this page. This information may be obtained from the identification plate located on the product.

ALL SERVICE FOR WARRANTY MUST BE PERFORMED BY AN AUTHORISED DIGGA SERVICE AGENT. CONTACT YOUR LOCAL DIGGA DEALER FOR DETAILS.

MODEL _____

SERIAL NUMBER _____

DATE PURCHASED _____

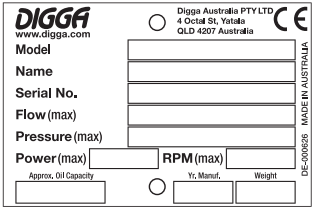

IMPORTANT: ALL SERVICE AND REPAIR FOR WARRANTY AND ASSESSMENT FOR WARRANTY MUST BE PERFORMED BY AN AUTHORISED DIGGA SERVICE AGENT, ONLY GENUINE DIGGA REPLACEMENT PARTS CAN BE USED. SUBSTITUTE PARTS WILL NOT MEET THE STANDARDS REQUIRED FOR SAFE, DEPENDABLE OPERATION. USE OF NON GENUINE DIGGA PARTS WILL VOID WARRANTY AND DIGGA WILL ACCEPT NO LIABILITY WHAT SO EVER FOR CONSEQUENTIAL OR SPECIAL DAMAGES.

The parts department needs this information to insure accurate parts can be sent to the authorised service agent.

MODELS COVERED IN THIS MANUAL

DOZER BLADE

To avoid any inconvenience before operation, please check that you have received the following items which you may have ordered. Items may differ depending on type of machine the Dozer Blade is to be fitted to.

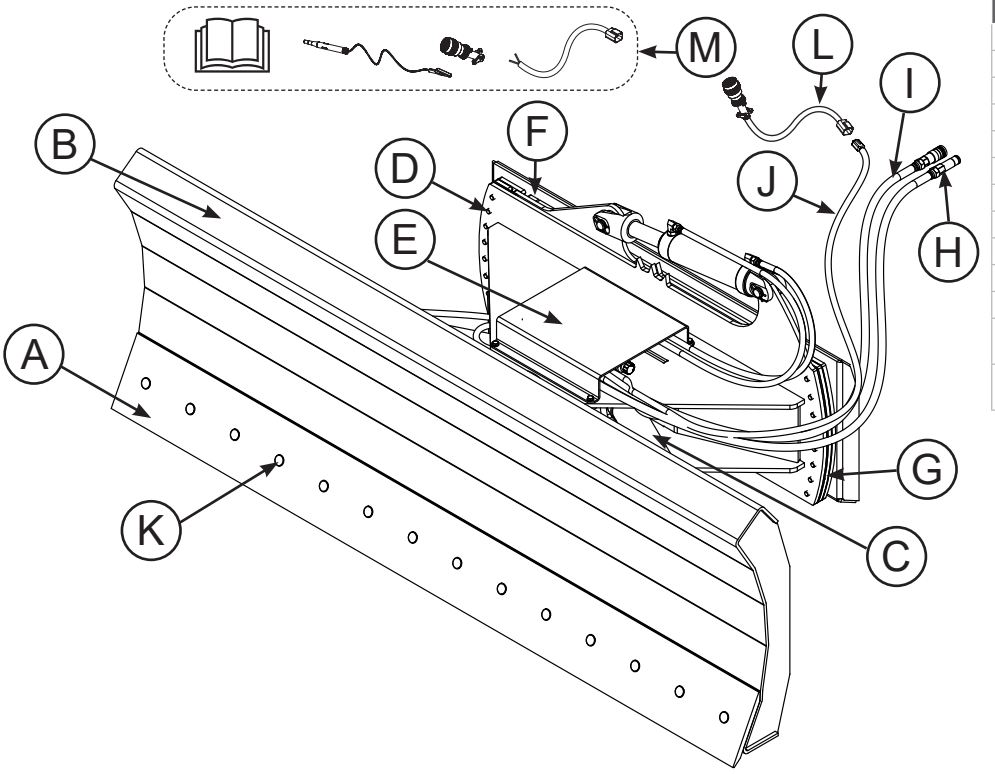

REF	DESCRIPTION	QTY
A	DOZER BLADE CUTTING EDGE	1
B	DOZER BLADE WELDMENT	1
C	HYDRAULIC CYLINDER	2
D	PIVOT CONNECTION WELDMENT	1
E	MANIFOLD COVER	1
F	QUICK HITCH	1
G	WEARPLATES	set
H	QUICK RELEASE COUPLERS	set
I	HYDRAULIC HOSE KIT	set
J	WIRING HARNESS	1
K	NUT & BOLT	14
L	Adaptor HARNESS CAT/ASV/TEREX (OPTIONAL)	1
M	14-PIN PLUG ADAPTOR HARNESS KIT **(OPTIONAL)**	1

4 SAFETY PRECAUTIONS - GENERAL INFORMATION

TAKE NOTE! THIS SAFETY ALERT SYMBOL FOUND THROUGHOUT THIS MANUAL IS USED TO CALL YOUR ATTENTION TO INSTRUCTIONS INVOLVING YOUR PERSONAL SAFETY OR OTHERS. FAILURE TO FOLLOW THESE INSTRUCTIONS CAN RESULT IN INJURY OR DEATH.

THIS SYMBOL MEANS:



ATTENTION!
BECOME ALERT!
YOUR SAFETY IS INVOLVED!

SIGNAL WORDS: Note the use of signal words DANGER, WARNING, and CAUTION with the safety messages. The appropriate signal word for each has been selected using the following guidelines:

DANGER: Indicates an imminently hazardous situation, which if not avoided, will result in death or serious injury. This signal word is to be limited to the most extreme situations, typically for machine components which, for functional purposes, cannot be guarded.

WARNING: Indicates a potentially hazardous situation, which if not avoided, could result in death or serious injury, and includes hazards that are exposed when guards are removed. It may also be used to alert against unsafe practices and indicate potential failure or damage to equipment.

CAUTION: Indicates a potentially hazardous situation, which if not avoided, may result in minor or moderate injury. It may also be used to alert against unsafe practices.

This section is composed of various warnings and safety tips. **Read and learn all the information in this section before you attempt to use your attachment.** Also read your machines owner's manual before using your equipment. This knowledge will help you operate your unit safely. **Do not take this information lightly, it is presented for your benefit and for the benefit of others working around you.**

The "Safety Alert Symbol" ⚠ will be used throughout this manual. It will appear with the word **DANGER, WARNING,** or **CAUTION**, and a safety message pertaining to the specific topic being covered. Take the time to read these messages as you come across them.

WARNING



KNOW WHERE UTILITIES ARE

Observe overhead electrical and other utility lines. Be sure equipment will clear them. When digging, call DIAL BEFORE YOU DIG ON 1100 (in Australia), or your local UTILITIES location service provider for location of buried utility lines, gas, water, and sewer, as well as any other hazard you may encounter.

WARNING



EXPOSURE TO RESPIRABLE CRYSTALLINE SILICA DUST ALONG WITH OTHER HAZARDOUS DUSTS MAY CAUSE SERIOUS OR FATAL RESPIRATORY DISEASE.

It is recommended to use dust suppression, dust collection and if necessary personal protective equipment during the operation of any attachment that may cause high levels of dust.

WARNING



REMOVE PAINT BEFORE WELDING OR HEATING

Hazardous fumes/dust can be generated when paint is heated by welding, soldering or using a torch. Do all work outside or in a well ventilated area and dispose of paint and solvent properly. Remove paint before welding or heating. When sanding or grinding paint, avoid breathing the dust. Wear an approved respirator. If you use solvent or paint stripper, remove stripper with soap and water before welding. Remove solvent or paint stripper containers and other flammable material from area. Allow fumes to disperse at least 15 minutes before welding or heating.

WARNING



END OF LIFE DISPOSAL

At the completion of the useful life of the unit, drain all fluids and dismantle by separating the different materials (rubber, steel, plastic, etc.). Follow all federal, state and local regulations for recycling and disposal of the fluid and components.

WARNING



OPERATING THE DOZER BLADE

- An operator must not use drugs or alcohol, which can change his or her alertness or coordination. An operator taking prescription or over-the-counter drugs should seek medical advice on whether or not he or she can safely operate equipment.
- All bystanders should be kept a minimum of 20 feet (6 meters) away from the working area of the Dozer Blade.
- Do not allow Site workers to climb or ride on Dozer Blade at any time, including while stationary, in operation or being moved.
- Operate only from the operator's station.

WARNING



- Avoid steep hillside operation which could cause the machine to overturn. Consult your machines operator's and safety manuals for maximum incline allowable.
- Reduce speed when driving over rough terrain, on a slope, or turning, to avoid overturning the vehicle.
- Travel only with the Dozer Blade in a safe transport position to prevent uncontrolled movement. Drive slowly over rough ground and on slopes.
- Do not drive close to ditches, excavations, etc., cave in could result.
- Before exiting the machine, lower the attachment to the ground, apply the parking brakes, turn off the prime mover's engine, and remove the key.

WARNING



- Flow and pressure gauges, fittings, and hoses must have a continuous operating pressure rating of at least 25% higher than highest pressures of the system.
- Do not smoke when refueling the prime mover. Allow room in the fuel tank for expansion. Wipe up any spilled fuel. Secure cap tightly when done.
- Remove the Dozer Blade from the prime mover before transporting to and from the job site.
- Dozer Blade shall be used only for their designed intent and shall not be loaded beyond their rated capacity. Overloading or exceeding the manufacturers specifications will void all warranty.

WARNING



OPERATING THE DOZER BLADE CONT....

- The Dozer Blade must be stopped before making adjustments to the attachment.
- All Excavation operations must be stopped in the event of local thunderstorm, or lightning activity. During operation, weather conditions shall be monitored: operations shall cease during electrical storms or when electrical storms are imminent.

STORAGE OF THE DOZER BLADE

WARNING



- Seal hydraulic couplers from contaminants and secure all hydraulic hoses off the ground to help prevent damage.
- Clean the unit thoroughly, removing all mud, dirt, and grease.
- Inspect for visible signs of wear, breakage, or damage. Order any parts required and make the necessary repairs to avoid delays upon removal from storage.
- Coat liberally with grease pivot points pins to prevent rust and reduce wear.
- Tighten loose nuts, cap screws and hydraulic connections.
- Replace decals that are damaged or in unreadable condition.
- Store unit in a dry and protected place. Leaving the unit outside will materially shorten its life.

WARNING



GROUND PERSONNEL AND BYSTANDERS

- Be alert to others in the work area. Be sure others know when and where you will be working. Make sure no one is behind equipment or within 6 metres of it operating.
- Loose fitting clothing, long hair, jewellery and equipment which might become entangled in moving equipment are prohibited while working near the Dozer Blade.
- Operators, helpers, and other personnel working near Dozer Blade must wear steel-toe safety shoes, safety glasses, and hard hats as a minimum. Hearing protection, respirators, and personnel protective clothing will be specified in the site-specific Health and Safety Plan.

WARNING



MAINTAINING THE DOZER BLADE

- Before performing maintenance, lower the attachment to the ground, apply the parking brakes, turn off the engine, and remove the key.
- Never adjust a relief valve for pressure higher than recommended by the machine's manufacturer.

WARNING



TRANSPORTING

Follow all local government regulations that may apply along with recommended tie down points and any equipment safety precautions at the front of this handbook when transporting your attachment.

WARNING



TIE DOWN POINTS

- Tie down points are identified by tie down decals where required. Securing to trailer at other points is unsafe and can damage attachment.
- Do not attach tie down accessories around cylinders or in any way that may damage hoses or hydraulic components.
- Attach tie down accessories to unit as recommended.
- Check unit stability before transporting.

Verify that all tie down accessories (chains, slings, ropes, shackles and etc.) are capable of maintaining attachment stability during transporting and are attached in such a way to prevent unintended disengagement or shifting of the unit. Failure to do so could result in serious personal injury or death.

TO THE OPERATOR

The primary responsibility for safety with this equipment falls to the operator. Make sure that the equipment is operated only by trained individuals that have read and understand this manual. Don't hurry the learning process or take the unit for granted.

It is the skill, care, common sense, and good judgement of the operator that will determine how efficiently and safely the job is performed. Know your equipment before you start. Know its capabilities and how to operate all the controls.

Visually inspect your equipment before you start, ensure correct assembly and installation of the attachment and never operate equipment that is not in proper working order.

Practice the operation of your new attachment and become familiar with the controls and the way it handles on your machine. If there is any portion of this manual or function you do not understand, contact your local authorized dealer or the manufacturer.

1. Never operate the Attachment without first reading and understanding the entire operator's manual.
2. Do not paint over, remove or deface any safety signs or warning decals on your equipment.
3. Follow all safety decals. Keep them clean and replace them if they become worn, damaged or illegible.
4. Know your equipment inside and out. Know how to operate all controls and know emergency shut down procedures.
5. Keep all stepping surfaces, pedals, and controls free from dirt, grease and oil. Keep equipment clean to help avoid injury from slipping or a fall when getting on or off equipment.
6. Operate the attachment only in daylight or with sufficient artificial light.
7. Always carry loads close to the ground. Do not step off machine platform with load raised.
8. Turn off engine before performing maintenance. All maintenance can be performed with the machine arms lowered. If lift arms must be left raised for any reason, use a positive lift arm lock to secure the arms in place. Serious damage or personal injury could result from lift arms accidentally lowering.
9. Do not exceed rated operating capacity of the host machine, as machine may become unstable resulting in loss of control.
10. Always lower the loader arms or machine boom to the ground, shut off the engine and remove the key before getting off the unit.
11. Never use the Dozer Blade on a machine that is not equipped with a cab or ROPS, and operator restraints (seat belts or equivalent devices).

5 SAFETY - WORKING WITH THE ATTACHMENT

WHEN DEALING WITH HYDRAULICS DURING ANY TYPE OF ASSEMBLY, OPERATION, MAINTENANCE, OR OTHER WORK ON OR NEAR THIS PRODUCT

- Hydraulic fluid under pressure can penetrate the skin and cause serious injury or death. Hydraulic leaks under pressure may not be visible!
- If any fluid penetrates the skin, GET IMMEDIATE MEDICAL ATTENTION!!
- Wear safety glasses, protective clothing, and use a sound piece of cardboard or wood when searching for hydraulic leaks. DO NOT USE YOUR HANDS!
- Before connecting or disconnecting hydraulic hoses, read your machine or power unit's operator's manual for detailed instructions on connecting and disconnecting hydraulic attachments.
- Make certain that all parts meet the specifications for this product when installing or replacing hydraulic hoses or fittings.
- After connecting hydraulic lines:
  - Slowly and carefully raise the loaders arm/s and cycle the rollback / dump cylinders to check hose clearances and to check for any interference.
  - Operate the hydraulics on this product to ascertain forward and reverse.
  - Make certain that the hoses cannot interfere with or actuate the quick-attach mechanism.
  - Make certain that hoses will not be pinched, or get tangled, in any equipment.
- Do not lock the auxiliary hydraulics of your power unit in the "ON" position.
- Refer to Machines operator manual and this manual for procedures and intervals, then inspect and maintain the entire hydraulic system to insure that the fluid remains clean, that all devices function properly, and that there are no fluid leaks.

WHEN MOUNTING THIS PRODUCT TO YOUR MACHINE

- Refer to the operator's manuals of your machine, and your quick-attach for special or detailed mounting instructions.
- This product should fit onto the tool bar/quick-attach mechanism of your machine.
- If this product does not fit properly, contact your Digga Dealer before operating.
- Where 'Dead Man' connections are connected or installed it is illegal to disengage, tamper with or remove them.

WHEN ADJUSTING, SERVICING OR REPAIRING THIS PRODUCT

- Make no modifications to your Dozer Blade.
- When making repairs use only authorised Digga service agents, and genuine Digga parts. For fasteners, hydraulic hoses, or hydraulic fittings, use only properly rated parts.
- Replacement parts must also have safety signs attached.

For additional safety information please see Risk Management booklet. To obtain a copy contact Digga Head Office on +61 7 3807 3330

SAFETY FIRST!! READ AND UNDERSTAND THE SAFETY INSTRUCTIONS BEFORE BEGINNING ANY ATTACHMENT MAINTENANCE.

BEFORE FIRST USE

- Inspect the attachment for shipping damage. If damage does exist, do not operate until the damaged parts have been replaced or repaired.

BEFORE EACH USE

- Make sure that all nuts and bolts are in place and properly tightened.
- Make sure that all other fasteners are in place and are performing their specified function.
- Make sure that all hydraulic fittings are tightened and that there are no leaks in any fittings or hoses.
- Make sure that all safety signs are in place, are clean, and are legible. (SEE THE SAFETY SIGN SECTION)
- Check for any oil leaks.
- Wear and tear on pins, linkages, clips, bushes and hood.
- Ensure any damage or excessively worn parts are replaced.
- Always wear safety goggles or glasses when inspecting equipment.

WARNING!

If injured by injected fluid, see a doctor at once. If your doctor is not familiar with this type of injury, ask him to research it immediately to determine proper treatment.

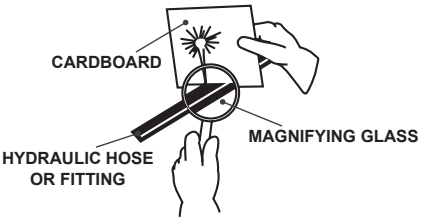

Escaping fluid under pressure can have sufficient force to penetrate the skin causing serious personal injury. Fluid escaping from a very small hole can be almost invisible. Use a piece of cardboard or wood, rather than hands to search for suspected leaks. Keep unprotected body parts, such as face, eyes, and arms as far away as possible from a suspected leak. Flesh injected with hydraulic fluid may develop gangrene or other permanent disabilities.

The DIGGA Dozer Blade attaches to the tool bar/quick-attach mechanism of your Machine. Due to this arrangement, thorough knowledge of the machinery controls is necessary for machine operation. Read and understand your machine operator's manual for information regarding machine operation before attempting to use the Dozer Blade. When a Dozer Blade is purchased from Digga or a DIGGA Dealer/Distributor the frame/attachment is matched for suitability and compatibility to the flows and pressure of the original machine it was purchased for. For Fitment of the Dozer Blade to other machines you must first contact your DIGGA dealer and receive written confirmation to ensure you do not incorrectly fit the Dozer Blade to a machine with higher flows or pressure than what the Dozer Blade was designed for. Warranty will be void if the Dozer Blade is fitted to an alternative machine without first receiving written confirmation from your DIGGA dealer.
Exceeding the recommended max flow and pressure of the Dozer Blade as stated on the serial tag will void all warranty.
Check the work site and identify the extent of the work to be carried out and note any possible hazards or constraints.
Underground cables, services etc. Check with relevant government departments on the location of these before commencement of any work. Review the job at hand and determine the Dozer Blade is appropriate for the intended conditions.

INSTALLATION INSTRUCTIONS

1. Remove the shipping banding from around the Dozer Blade and Frame.
2. Remove any attachments from the front of the Machine.
3. Ensure you have read the serial tag on the Dozer Blade to obtain the max flow and pressure ratings. Ensure your machine flow and pressure settings are aligned with the requirements of the Dozer Blade.

NEVER EXCEED THE MAX FLOW AND PRESSURE RATINGS AS WARRANTY WILL BE VOID.

4. Following all standard safety practices and the instructions for installing an attachment in your machine operator's manual, install the Dozer Blade onto your Machine.



NOTE: IT IS IMPORTANT TO MAKE SURE THE LOCKING MECHANISM ON YOUR QUICK ATTACH IS ENGAGED, THEREFORE LOCKING THE ATTACHMENT ONTO THE MACHINE.

5. Lower the unit to the ground and remove the key from the parent machine.
6. Relieve any pressure from the auxiliary hydraulic system and after making sure that there is not any foreign matter on the hydraulic couplers, connect the power and return couplers to the auxiliary hydraulic system of your machine.
8. Route the hoses in such a fashion as to avoid pinching or chafing.
9. Connect the Wiring Harness as per "connecting the wiring harness" on page 17.
10. Carefully raise the loader and cycle the tilt cylinders to check clearances and to verify that all mounting procedures have been successfully completed. The machine is now ready for use.
11. Check the cutting edges are not worn. Ensure all worn parts are replaced. Worn parts will be come ineffective and severely diminish the overall performance of the Dozer Blade.

OPERATING PROCEDURES

STANDARD DOZER BLADE OPERATION

1. Always begin with the slowest ground speed possible. Increase speed if surrounding grounds permit.
2. When levelling, scraping and surface stripping lower the cutting edge to the ground and the blade will bite into the ground as you move forward.

ANGLING THE BLADE (HORIZONTAL MOVEMENT)

1. The blade is angled hydraulically by two cylinders connected to the blade and the rear frame. It can be angled 30° left or right.
2. The angle cylinders are activated by the auxiliary hydraulic system controls, see you machines operator manual for instructions on how to operate with them

TILTING THE BLADE (VERTICAL MOVEMENT)

1. The blade can be tilted hydraulically to a maximum of 12° clockwise or anti-clockwise from the horizontal position

CAUTION: DRIVE SLOWLY AND WITH CAUTION WHEN OPERATING THE DOZER BLADE. THE FORCE OF THE IMPACT IF THE BLADE HITS AN IMMOVABLE OBJECT COULD CAUSE DAMAGE TO THE BLADE AND LOADER, AND INJURY TO THE OPERATOR

REMOVAL AND STORAGE

1. Set the attachment on the ground and follow the standard shut down procedure in your loader operators manual.
2. With the loader OFF, disengage the attachment lock pins, release hydraulic pressure from the auxiliary hydraulic system and disconnect the hydraulic couplers and 8-pin or 14-pin plug from the loader or TC-000011 harness from the harness on the boom.
3. Start the machines engine and make sure that the lift arm is lowered and in contact with the loader frame.
4. Roll the attachment mechanism forward and slowly back up until the attachment is free from the machine.
5. Remove and store the attachment/s in a dry and protected place. Leaving the attachment/s outside will materially shorten its life.

WHEN ATTACHMENTS NOT ON PARENT MACHINE

It is a requirement of the Australian Work place Health and Safety act 1995 that safe systems of work are employed when handling any attachments. Complete compliance with Work place Health and Safety issues is compulsory and all due care and attention must be observed at all times in any method of moving, transporting or storing any such device when not attached to a parent machine. We recommend attachments are well secured when being moved or in transit and furthermore prior to moving, storing, loading/unloading or parking it is suggested that the attachment is strapped/secured to a pallet or enclosed in a suitable container to minimise any movement or loss of the load during such activity. NO responsibility for loss or damage to persons or property in any regard can be attributed to Digga.

TRANSPORTING THE ATTACHMENT

1. Follow all federal, state and local regulations when transporting the unit on public roads.
2. Use extra care when loading or unloading the machine onto a trailer or truck. Disconnect hydraulic couplers during transportation

Your Digga Dozer Blade is supplied with a harness which has a 2 pin plug (TC-000011) as standard fitment.

After Connecting your hydraulic hoses to the machine, follow the procedures below to connect the wiring harness

STANDARD HARNESS WITH 2 PIN PLUG (TC-000011)

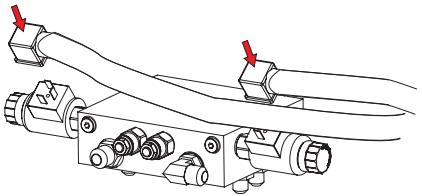

1. Din plugs are already connected to the manifolds (this is done at the factory)

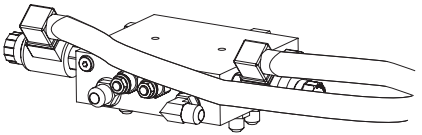

2. A visual inspection is all the is required by the owner to confirm that they are connected

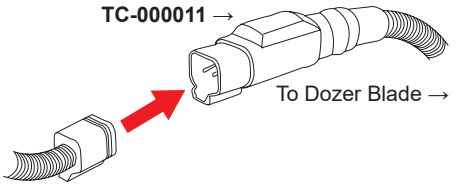

OPTIONAL TC-000013 kit shown

3. The TC-000011 Harness does not connect to any machine. It requires the optional TC-000013 kit **OR** the customer will need to run own electricals and switch **OR** Purchase Adaptor harness DM-000032 **OR** Purchase 14-Pin Plug Kit EC-000241

LOADERS WITH 8 PIN PLUG (CAT/ASV/TEREX/KOMATSU) THE ADAPTOR HARNESS (DM-000032) WILL BE REQUIRED.

1. Confirm the deutsch plug is aligned before pushing it into place and rotate the locking ring clockwise until it stops.

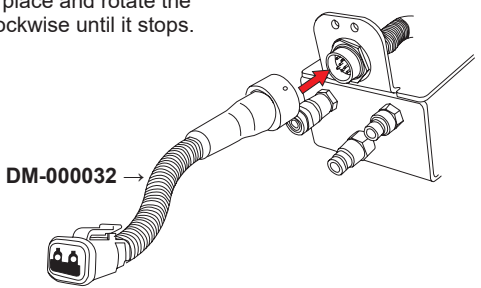

LOADERS WITH 14 PIN PLUG (CASE/NEW HOLLAND/KUBOTA) THE ADAPTOR HARNESS (EC-000241 KIT) WILL BE REQUIRED.

1. Confirm the 14-Pin Deutch plug is aligned before pushing it into place and rotate the locking ring clockwise until it stops.

NOTE: Adaptor harness DM-000041 is supplied without the 14-pin plug installed. Customer has to perform electrical checks on loader to select correct pinout for plug.

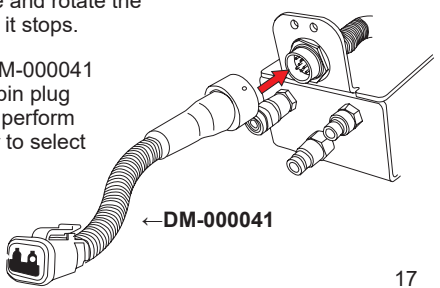

8 MAINTENANCE

The key feature of your Digga Dozer Blade is low maintenance. Unauthorised disassembly will void warranty

SAFETY FIRST!! READ AND UNDERSTAND THE SAFETY INSTRUCTIONS BEFORE BEGINNING ANY MAINTENANCE.

BEFORE FIRST USE

- Inspect the attachment for shipping damage. If damage does exist, do not operate until the damaged parts have been re placed or repaired.

BEFORE EACH USE

- Make sure that all nuts and bolts are in place and properly tightened.
- Make sure that all other fasteners are in place and are performing their specified function.
- Make sure that all hydraulic fittings are tightened and that there are no leaks in any fittings or hoses.
- Make sure that all safety signs are in place, are clean, and are legible. (SEE THE SAFETY SIGN SECTION)
- Wear and tear on Pins, linkages, cutting edges
- Replace any damaged parts and excessively worn parts.
- Use only manufacturer recommended replacement parts. Other parts may be substandard in fit and quality.
- Always wear safety goggles or glasses when inspecting equipment

AFTER THE FIRST 10 HOURS OF USE

- Re-torque all bolts on the Tilt pickup to 45 Nm

EVERY 40 HOURS OF USE

Grease all fittings

- Note: Some of the hydraulic cylinders have two grease fittings on the cross tube end of the barrel section of the cylinder. Only one of these two fitting must be greased
- Re-torque all bolts on the Tilt pickup to 45 Nm

Always wear safety goggles or glasses when inspecting equipment

WARNING!

If injured by injected fluid, see a doctor at once. If your doctor is not familiar with this type of injury, ask him to research it immediately to determine proper treatment.

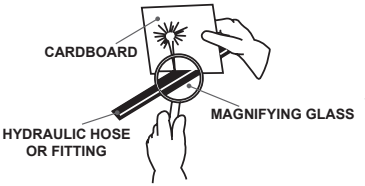

Escaping fluid under pressure can have sufficient force to penetrate the skin causing serious personal injury. Fluid escaping from a very small hole can be almost invisible. Use a piece of cardboard or wood, rather than hands to search for suspected leaks. Keep unprotected body parts, such as face, eyes, and arms as far away as possible from a suspected leak. Flesh injected with hydraulic fluid may develop gangrene or other permanent disabilities.

PLACEMENT OR REPLACEMENT OF SAFETY SIGNS

1. Clean the area of application with non-flammable solvent, then wash the same area with soap and water.
2. Allow the surface to fully dry.
3. Remove the backing from the safety sign, exposing the adhesive surface.
4. Apply the safety sign to the position shown in the diagram and smooth out any bubbles.

INSTRUCTIONS

- Keep all safety signs clean and legible.
- Replace all missing, illegible, or damaged safety signs.
- Replacement parts for parts with safety signs attached must also have safety signs attached.
- Safety signs are available from your dealer or from Digga Australia.

ORDER CODE	DESCRIPTION	QTY
DE-000055	Pressure Tested Decal (ITEM 1)	1
DE-000129	Pinch Point Decal (ITEM 2)	1
DE-000089	Warning Decal (ITEM 3)	1
DE-000088	Caution Decal (ITEM 4)	1
DE-000626	Serial Tag	1

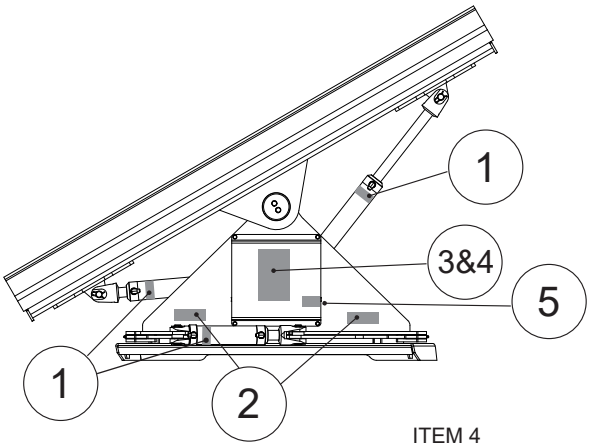

ITEM 1



ITEM 2



ITEM 3



ITEM 4



ITEM 5

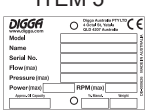

For further information on spare parts please contact one of the Digga sales office below your closest authorised Digga Dealer.

DIGGA INTERNATIONAL SALES OFFICES

ASIA PACIFIC

DIGGA HEAD OFFICE - BRISBANE
4 Octal St, Yatala QLD 4207

PH: (07) 3807 3330

EMAIL: info@digga.com

DIGGA NEW SOUTH WALES
19 Mckay Close,
Wetherill Park, NSW 2164

PH: 1300 2 DIGGA

EMAIL: nsw@digga.com

DIGGA VICTORIA
17-21 Babbage Dr,
Dandenong, VIC 3175

PH: 1300 2 DIGGA

EMAIL: vic@digga.com

WEB: www.digga.com

NORTH AMERICA

DIGGA NORTH AMERICA
2325 Industrial Parkway SW
Dyersville IA 52040

PH: + 1 563 875 7915

WEB: www.diggausa.com

EMAIL: info@diggausa.com

EUROPE

DIGGA EUROPE
Unit 6, Smitham Bridge Road
Hungerford Trading Estate,
Hungerford, Berkshire RG17 0QU
England, United Kingdom

PH: +44 (0) 1488 688 550

WEB: www.diggaeurope.com

EMAIL: info@diggaeurope.com

DOZER BLADE

TROUBLE	POSSIBLE CAUSE	REMEDY
Blade fails to angle	Obstruction in hydraulic line	Remove Obstruction or replace
	Hydraulic Couplers not properly connected	Check and Tighten Couplers
	Hydraulic Couplers malfunctioning or non-compatable	Repair or Replace
	Defective Hydraulic cylinder	Contact your Local DIGGA Dealer
	Spool in solenoid valve jammed	Contact DIGGA
Blade fails to Tilt	Obstruction in Hydraulic Line	
	Hydraulic Couplers not properly connected	Check and Tighten Couplers
	Hose kinked or squashed	Check and unkink or Replace
	Hydraulic Couplers malfunctioning or non-compatable	Repair or Replace
	Defective Hydraulic Cylinder	Contact your Local DIGGA Dealer
	Faulty Solenoid	Contact your Local DIGGA Dealer
	No Electrical Signal to solenoid	Contact your Local DIGGA Dealer
	Pin Configuration on cable non-compatable	Contact your Local DIGGA Dealer
	Broken or disconnected cable	Repair or Replace
	Spool in solenoid valve jammed	Contact DIGGA
Blade Angling or Tilting too slowly	Cold Oil	Warm oil with engine at idle
	Engine speed to slow	Open throttle
	Oil Leaking past cylinder packings	Replace cylinder seals
	Orifice in cylinder fitting blocked	Contact DIGGA
Blade fails to maintain angle or tilt	Broken or leaking hydraulic lines	Replace and Repair
	Oil Leaking past valve spool	Replace and Repair
	Oil leaking past cylinder packings	Replace cylinder seals
External Leaking	Seals damaged	Replace and Repair
	Broken or loose hydraulic fittings or lines	Replace and Repair

WARRANTY

12MONTHWARRANTY

All new Digga products are warranted to be free from defects in materials or workmanship, for a period of twelve (12) months from date of original purchase which may cause failure under normal usage and service when used for the purpose intended.

In the event of failure (excluding cable, ground engaging parts such as sprockets, digging chain, bearings, teeth, tamping and demolition heads, blade cutting edges, pilot bits, auger teeth, auger heads), if after examination, Digga determines failure was due to defective material and/or workmanship, parts only will be repaired or replaced. Digga may request defective product or products be returned prepaid to them for inspection at their place of business or to a location specified by Digga. The warranty will be considered void if the product or any part of the product us modified or repaired in any way not expressly authorized by Digga, or if closed components are disassembled prior to return. Closed components include, but are not limited to: gearboxes, hydraulic pumps, motors, cylinders and actuators. Any goods returned to Digga by the customer under warranty or repair must have all freight charges prepaid for on the customers account.

Any claims under this warranty must be made within fifteen (15) days after the Buyer learns of the facts upon which such claim is based. All claims not made in writing and received by Digga outside the time period specified above shall be deemed waived.

DAMAGEORFAILURETHROUGHOPERATORABUSEORNEGLIGENCEVOIDSWARRANTY

THIS WARRANTY IS IN LIEU OF ALL OTHER WARRANTIES EXPRESSED OR IMPLIED AND THERE ARE NO WARRANTIES OF MERCHANTABILITY OR OF FITNESS FOR A PARTICULAR PURPOSE. IN NO EVENT SHALL DIGGA BE LIABLE FOR CONSEQUENTIAL OR SPECIAL DAMAGE. DIGGA'S LIABILITY FOR ANY AND ALL LOSSES AND DAMAGES TO BUYER, RESULTING FROM ANY CAUSE WHATSOEVER, INCLUDING DIGGA'S NEGLIGENCE, IRRESPECTIVE OF WHETHER SUCH DEFECTS ARE DISCOVERABLE OR LATENT, SHALL IN NO EVENT EXCEED THE PURCHASE PRICE OF THE PARTICULAR PRODUCTS WITH RESPECT TO WHICH LOSSES OR DAMAGES ARE CLAIMED, OR, AT THE ELECTION OF DIGGA, THE REPAIR OR REPLACEMENT OF DEFECTIVE OR DAMAGED PRODUCTS.



Australian Designed and Manufactured